BASED ON BS.8888

DO NOT SCALE IF IN DOUBT ASK

DIMENSIONS IN MILLIMETRES

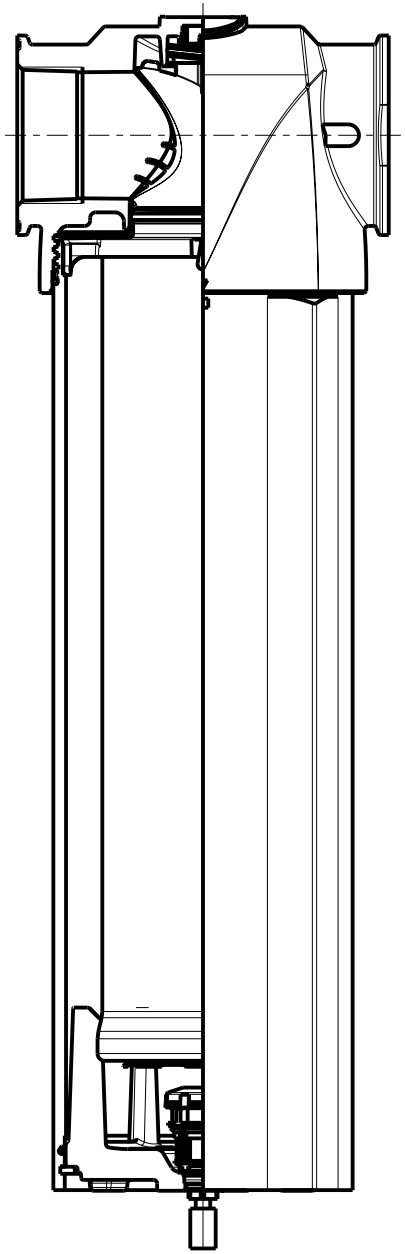

MODEL 050 & 055 ONLY

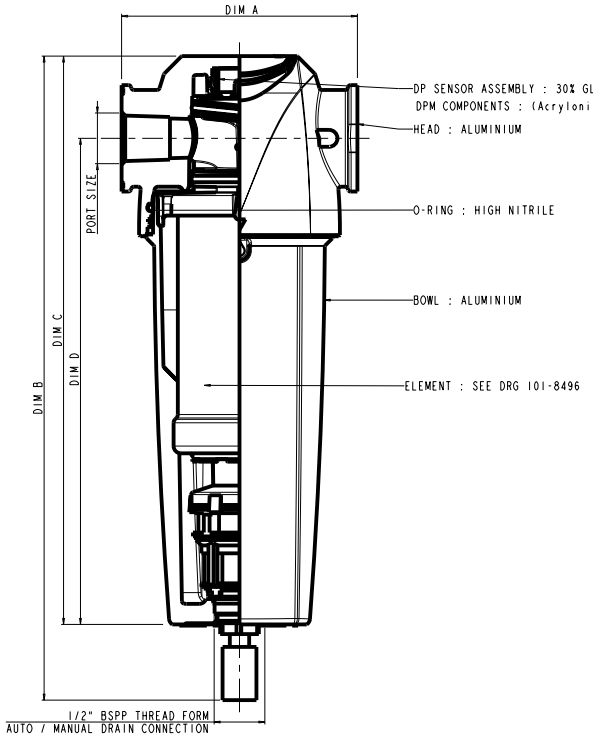

NOTE
****

AO,AA & AX MODELS HAVE AUTODRAINS
AR & AAR MODELS HAVE MANUAL DRAINS

DESIGN PARAMETERS
****

DESIGN CODE	GENERALLY TO ASME VIII DIV.1 / AS1210
DESIGN PRESSURE	20.7 barg / 300 psig
DESIGN TEMPERATURE	100°C / 212°F
CORROSION PROTECTION	ALOCROM SURFACE TREATMENT EXTERNALLY PAINTED DRY EPOXY POWDER

SALES DRAWING REF
****

STANDARD PRODUCT OFFERING	101-8486
PREMIUM PRODUCT OFFERING	101-8498

OPERATING PARAMETERS		
	AUTO DRAIN	MANUAL DRAIN
MAX WORKING PRESSURE	16 barg / 232 psig	20.7 barg / 300 psig
MAX WORKING TEMPERATURE	80°C / 176°F	100°C / 212°F
MIN WORKING PRESSURE	0 barg / 0 psig	0 barg / 0 psig
MIN WORKING TEMPERATURE	1.5°C / 35°F	1.5°C / 35°F

GRADE	MODEL	BSPP / NPT PORT SIZE	FLOW RATE m3/min	FLOW RATE m3/hr	FLOW RATE scfm	DIMENSIONS IN mm / (INCHES) A	B	C	D	WEIGHT kg / (lbs)
AO AA AX AR AAR	010	1/4"	0.6	36	21	76 (3.0)	214 (8.4)	181.5 (7.2)	153.2 (6.0)	0.6 (1.3)
	010	3/8"	0.6	36	21	76 (3.0)	214 (8.4)	181.5 (7.2)	153.2 (6.0)	0.6 (1.3)
	010	1/2"	0.6	36	21	76 (3.0)	214 (8.4)	181.5 (7.2)	153.2 (6.0)	0.6 (1.3)
	015	3/8"	1.2	72	42	97.5 (3.8)	266 (10.5)	235 (9.3)	201 (7.9)	1.1 (2.4)
	015	1/2"	1.2	72	42	97.5 (3.8)	266 (10.5)	235 (9.3)	201 (7.9)	1.1 (2.4)
	020	1/2"	1.8	108	64	97.5 (3.8)	266 (10.5)	235 (9.3)	201 (7.9)	1.1 (2.4)
	020	3/4"	1.8	108	64	97.5 (3.8)	266 (10.5)	235 (9.3)	201 (7.9)	1.1 (2.4)
	020	1"	1.8	108	64	97.5 (3.8)	266 (10.5)	235 (9.3)	201 (7.9)	1.1 (2.4)
	025	3/4"	3.6	216	127	129 (5.1)	306 (12.0)	274.8 (10.8)	232.5 (9.2)	2.2 (4.8)
	025	1"	3.6	216	127	129 (5.1)	306 (12.0)	274.8 (10.8)	232.5 (9.2)	2.2 (4.8)
	030	1"	6.6	396	233	129 (5.1)	397 (15.6)	364.3 (14.3)	322 (12.7)	2.7 (5.9)
	030	1 1/4"	6.6	396	233	129 (5.1)	397 (15.6)	364.3 (14.3)	322 (12.7)	2.7 (5.9)
	030	1 1/2"	6.6	396	233	129 (5.1)	397 (15.6)	364.3 (14.3)	322 (12.7)	2.7 (5.9)
	035	1 1/4"	9.6	576	399	170 (6.7)	464 (18.3)	432.5 (17.0)	382.5 (15.0)	5.1 (11.2)
	035	1 1/2"	9.6	576	399	170 (6.7)	464 (18.3)	432.5 (17.0)	382.5 (15.0)	5.1 (11.2)
	040	1 1/2"	13.2	792	466	170 (6.7)	556 (21.9)	524.5 (20.6)	474.5 (18.7)	5.7 (12.5)
	040	2"	13.2	792	466	170 (6.7)	556 (21.9)	524.5 (20.6)	474.5 (187)	5.7 (12.5)
	045	2"	19.2	1152	678	170 (6.7)	556 (21.9)	524.5 (20.6)	474.5 (18.7)	5.7 (12.5)
	050	2 1/2"	25.8	1548	911	204.8 (8.1)	674 (26.5)	641.6 (25.3)	581.6 (22.9)	11.1 (24.4)
	050	3"	25.8	1548	911	204.8 (8.1)	674 (26.5)	641.6 (25.3)	772.1 (30.4)	11.1 (24.4)
	055	2 1/2"	37.2	2232	1314	204.8 (8.1)	865 (34.0)	832.1 (32.8)	772.1 (30.4)	13.9 (30.6)
	055	3"	37.2	2232	1314	204.8 (8.1)	865 (34.0)	832.1 (32.8)	772.1 (30.4)	13.9 (30.6)

GENERAL TOLERANCES UNLESS OTHERWISE STATED

MACHINED DIMENSIONS
.XX ±0.13 UP TO 300 ±0.3
.X ±0.25 OVER 300 TO 600 ±0.5

POSITIONAL TOLERANCE
PLAIN HOLES Ø0.13
TAPPED HOLES Ø0.26
CONCENTRICITY TOLERANCE 0.13 TIR

MACHINED SURFACES INDICATED THUS
SURFACE TEXTURE TO BS 1134
VALUES IN MICROMETRES

ANGLES ±1/2° (EXCEPT CHAMFERS)

METRIC THREADS TO BS 3643 MED. CLASS
EXTERNAL 6g INTERNAL 6H
PIPE THREADS
PRESSURE TIGHT TO BS 21

SHEET METALWORK & FABRICATIONS
SHEET METALWORK DIMENSIONS
UP TO 500 ±0.5
OVER 500 TO 1000 ±1.0
OVER 1000 ±1.5

FABRICATED PARTS DIMENSIONS
UP TO 500 ±0
OVER 500 TO 1000 ±0
OVER 1000 ±0

POSITIONAL TOLERANCE FOR PLAIN & TAPPED HOLES
UP TO 500 Ø0.8
OVER 500 Ø1.0

REV	ECO No.	DATE	NAME
B	*****	17.05.04	SB
A	*****	01.02.04	SB

DOMNICK HUNTER LIMITED

DURHAM ROAD,BIRTLEY
Co.DURHAM, ENGLAND
Tel: 0191 410 5121
Telex: 537262
Telefax: 0191 410 7621

THE ORIGINAL OF THIS DRAWING IS COPYRIGHT AND CONTAINS CONFIDENTIAL INFORMATION.IT IS THE PROPERTY OF DOMNICK HUNTER LIMITED WITHOUT WHOSE PERMISSION IT MAY NOT BE COPIED,SHOWN OR HANDED TO A THIRD PARTY OR OTHERWISE USED AND IT IS TO BE RETURNED PROMPTLY UPON REQUEST TO DOMNICK HUNTER. ©2004 A1

PDM DATABASE =

MATERIAL: SALES DRG

SCALE: 1.000

	DRAWN	CHECKED	APPROVED
NAME	SB		
DATE	14-May-04		

TITLE: OIL-X EVOLUTION SALES DRAWING (Standard Product)

DRG. No 101-8486

SHEET 1 of 1

Model No: 604422300