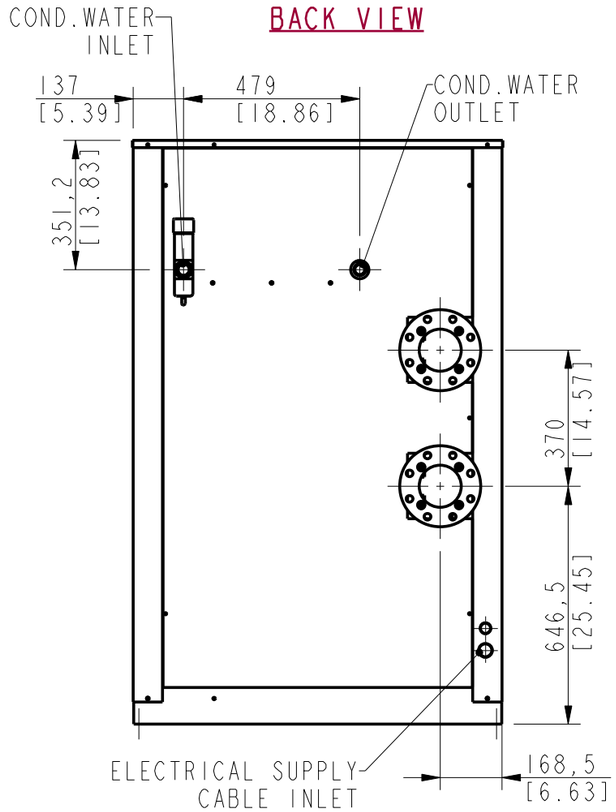

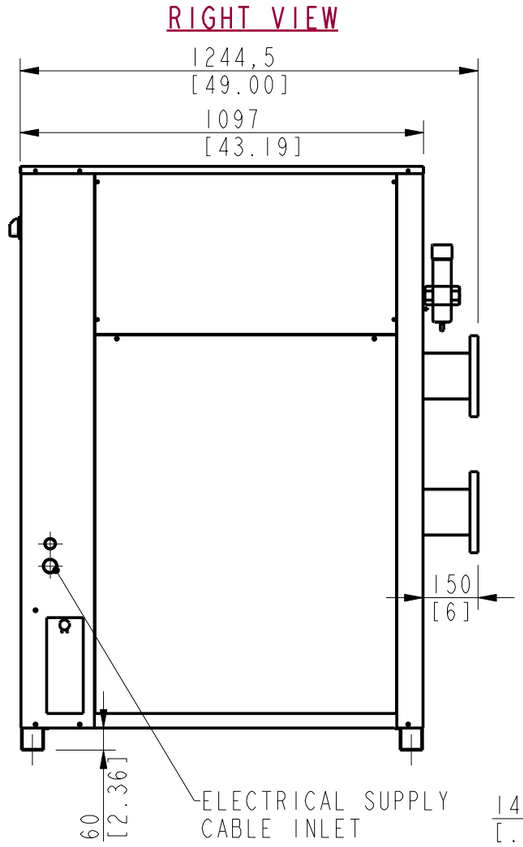

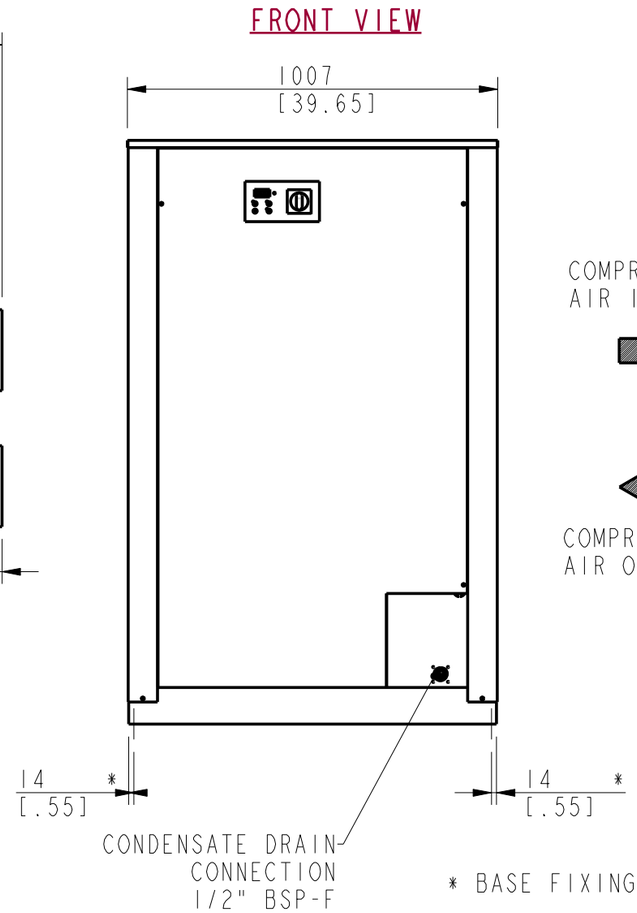

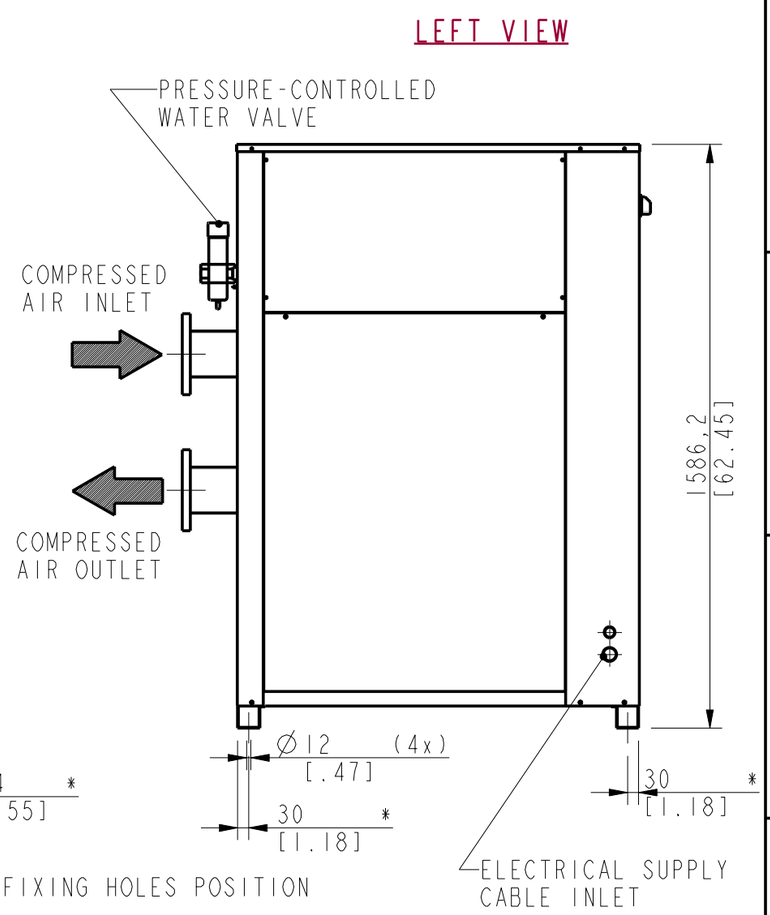

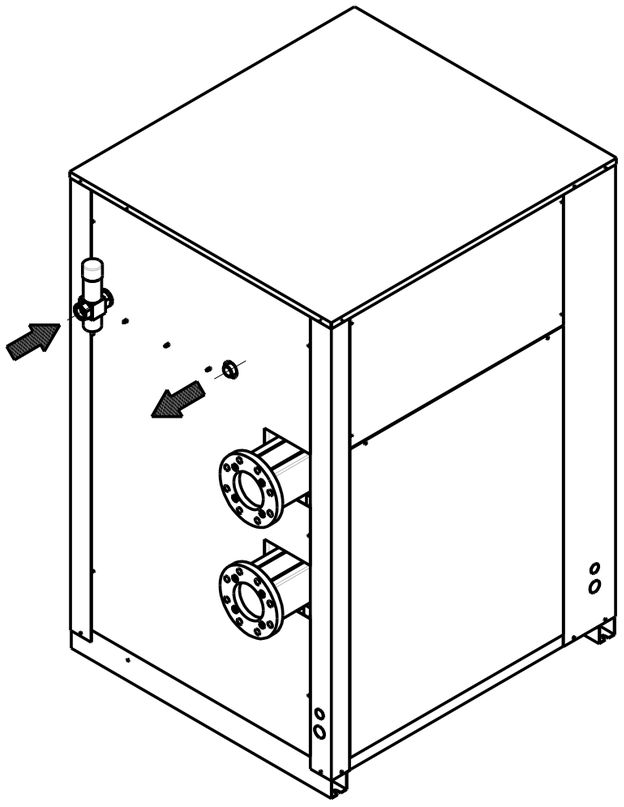

SCALA 0.060

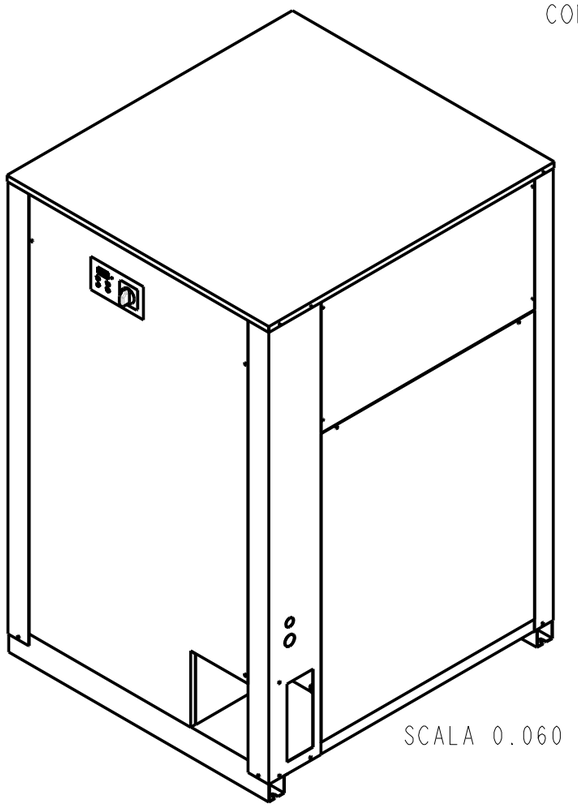

SCALA 0.060

MODEL 50Hz	AIR CONNECTION 50Hz version	WATER CONNECTION 50Hz version
PST460	UNI PN16-DN100	1" BSPT-F
PST520	UNI PN16-DN100	1" BSPT-F
PST630	UNI PN16-DN100	1" BSPT-F

MODEL 60Hz	AIR CONNECTION 60Hz version	WATER CONNECTION 60Hz version
PST460-490	ANSI 4"-150 LBS	1" NPT-F
PST630-560	ANSI 4"-150 LBS	1" NPT-F

REV.		Firma Sign.	-	Data Date		Visto Checked	-	Tolleranza generale a disegno JZ000006AI	Foglio n° di
Sostituisce disegno - Replaced drawing	N°prog.-Design N° 1022	Modif.request N°		Material -		Approval date		Approvato da - Approved by D'ISANTO	

Parker HIROSS

Manufactured by Parker Hiross S.p.A.
Strada Zona Industriale,4 - S. Angelo di Piove (PD) Italy

HIROSS is a registered trademark licensed by Liebert HIROSS S.p.A.

Scala - Scale	Data - Date	Dis.- Draftsman
0.060	19/05/2005	PRENDIN

Codice - Code	Destinazione - Destination
	PST

Denominazione - Denomination
OVERALL DIMENSIONS WATER COND.
PST460/630 50Hz - PST490/560 60Hz

Disegno - Drawing
BCA630IN1W

REV. **01**