BASED ON B.S.8888

DO NOT SCALE IF IN DOUBT ASK

DIMENSIONS IN MILLIMETRES

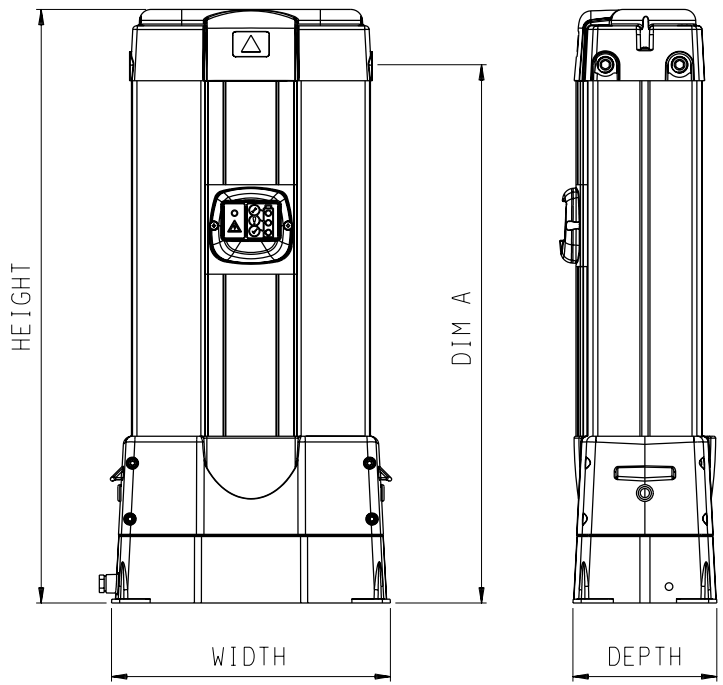

GENERAL TOLERANCES UNLESS OTHERWISE STATED

MACHINED DIMENSIONS
.XX ±0.13 UP TO 300 ±0.3
.X ±0.25 OVER 300 TO 600 ±0.5

POSITIONAL TOLERANCE
PLAIN HOLES ø0.13
TAPPED HOLES ø0.26
CONCENTRICITY TOLERANCE 0.13 TIR

MACHINED SURFACES INDICATED THUS
SURFACE TEXTURE TO BS 1134
VALUES IN MICROMETRES

ANGLES ±1/2°(EXCEPT CHAMFERS)

METRIC THREADS TO BS 3643 MED. CLASS
EXTERNAL 6g INTERNAL 6H
PIPE THREADS
PRESSURE TIGHT TO BS 21

SHEET METALWORK & FABRICATIONS
SHEET METALWORK DIMENSIONS
UP TO 500 ±0.5
OVER 500 TO 1000 ±1.0
OVER 1000 ±1.5

FABRICATED PARTS DIMENSIONS
UP TO 500 ±2
OVER 500 TO 1000 ±4
OVER 1000 ±6

POSITIONAL TOLERANCE FOR PLAIN & TAPPED HOLES
UP TO 500 ø1.0
OVER 500 ø2.0

MODEL	PIPE SIZE	DIMENSIONS								WEIGHT	
		HEIGHT		WIDTH		DEPTH		DIM A			
		mm	In	mm	In	mm	In	mm	In	kg	lbs
DAS1	G 3/8	422	16.6"	289	11.4"	149	5.9"	365	14.4"	11	24.3
DAS2	G 3/8	500	19.7"	289	11.4"	149	5.9"	443	17.4"	13	28.7
DAS3	G 3/8	616	24.3"	289	11.4"	149	5.9"	559	22.0"	16	35.3
DAS4	G 3/8	692	27.2"	289	11.4"	149	5.9"	635	25.0"	18	39.7
DAS5	G 3/8	847	33.3"	289	11.4"	149	5.9"	790	31.0"	20	44.1
DAS6	G 3/8	906	35.7"	289	11.4"	149	5.9"	849	33.4"	23	50.7
DAS7	G 3/8	1098	43.2"	289	11.4"	149	5.9"	1041	41.0"	28	61.7

REV.	DCO No.	DATE	NAME
A	0011967	4May2011	AK
-	0010242	18Feb2011	AK

Parker Hannifin ltd
Dukesway, Team Valley
Gateshead, Tyne & Wear
England NE11 OPZ
TEL +44 (0)191 402 9000
FAX +44 (0)191 482 6296
www.domnickhunter.com

THIS DOCUMENT IS COPYRIGHT AND IS THE PROPERTY OF PARKER HANNIFIN LTD. IT MUST NOT BE COPIED IN WHOLE OR PART, USED FOR MANUFACTURE OF, OR OTHERWISE DISCLOSED WITHOUT PRIOR WRITTEN CONSENT OF THE COMPANY
©2010 A3

MATERIAL: GEN. ARRGT.

SCALE: 1 :.12

	DRAWN	CHECKED	APPROVED
NAME	AK	EJ	AG
DATE	18Feb2011	18Feb2011	18Feb2011

TITLE: PNEUDRI MIDAS DIM SALES DRG

DRG. No: 101-10120

SHEET: 1 of 1