BASED ON B.S.8888

DO NOT SCALE IF IN DOUBT ASK

DIMENSIONS IN MILLIMETRES

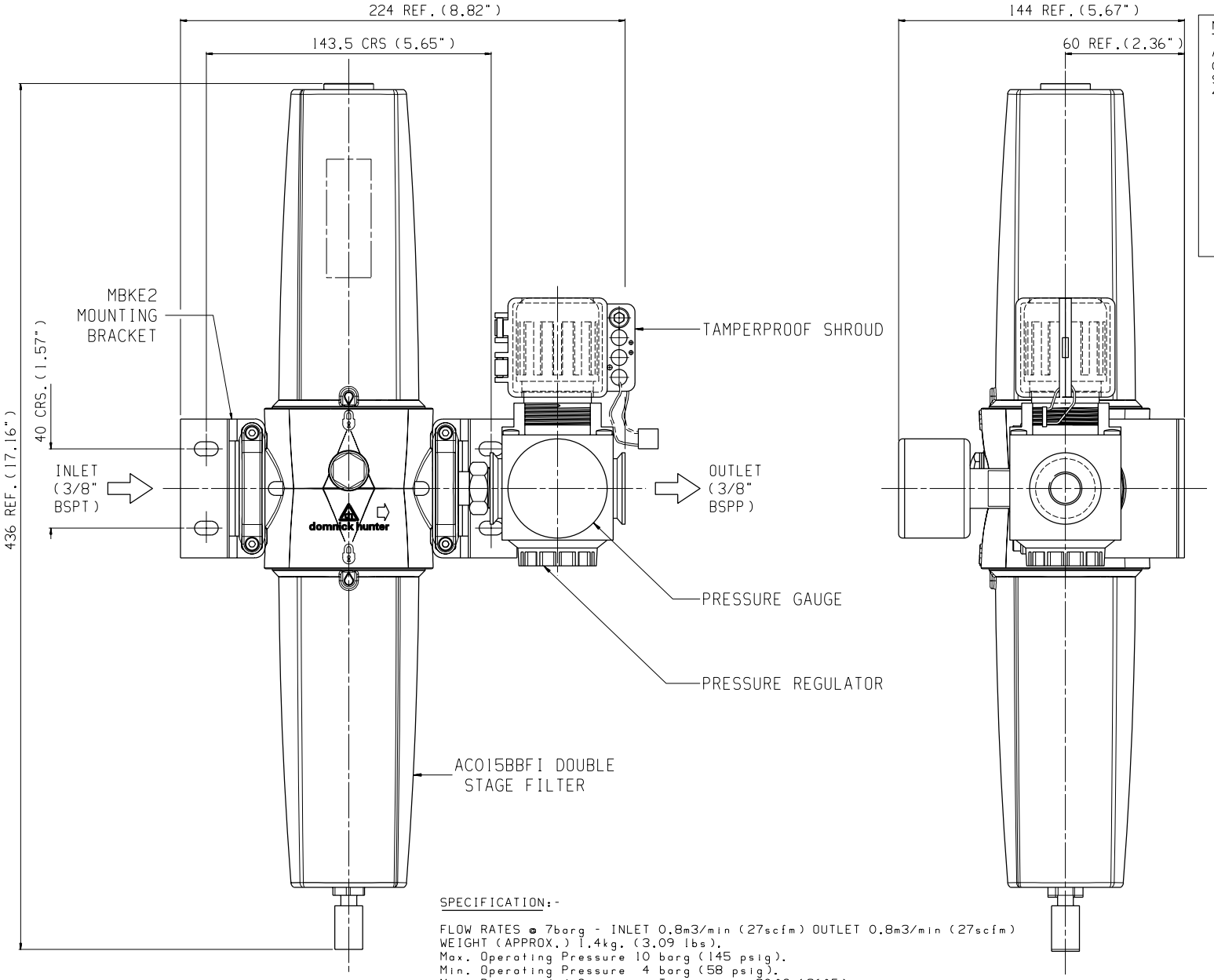

NOTE:-

ALL BAF-015 PRODUCTS ARE SUPPLIED COMPLETE WITH AN 015AC-4 12 MONTHS SUPPORT PACK, CONSISTING OF 4 x 015AC CARTRIDGES.

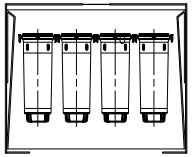

SPECIFICATION:-

FLOW RATES @ 7barg - INLET 0.8m3/min (27scfm) OUTLET 0.8m3/min (27scfm)
WEIGHT (APPROX.) 1.4kg. (3.09 lbs).
Max. Operating Pressure 10 barg (145 psig).
Min. Operating Pressure 4 barg (58 psig).
Max. Recommended Operating Temperature 30°C (86°F).
Min. Recommended Operating Temperature 1.5°C (35°F).

UNIT TO BE PACKED IN BOX C/W USER GUIDE.

GENERAL TOLERANCES UNLESS OTHERWISE STATED

MACHINED DIMENSIONS
.XX ±0.13 UP TO 300 ±0.3
.X ±0.25 OVER 300 TO 600 ±0.5

POSITIONAL TOLERANCE
PLAIN HOLES ±0.13
TAPPED HOLES ±0.25
CONCENTRICITY TOLERANCE 0.13 TIR

MACHINED SURFACES INDICATED THUS
SURFACE TEXTURE TO BS 1134
VALUES IN MICROMETRES

ANGLES ±1/2°(EXCEPT CHAMFERS)

METRIC THREADS TO BS 3643 MED. CLASS
EXTERNAL 6g INTERNAL 6H
PIPE THREADS
PRESSURE TIGHT TO BS 21

SHEET METALWORK & FABRICATIONS
SHEET METALWORK DIMENSIONS
UP TO 500 ±0.5
OVER 500 TO 1000 ±1.0
OVER 1000 ±1.5

FABRICATED PARTS DIMENSIONS
UP TO 500 ±2
OVER 500 TO 1000 ±4
OVER 1000 ±6

POSITIONAL TOLERANCE FOR PLAIN & TAPPED HOLES
UP TO 500 ±1.0
OVER 500 ±2.0

REV	DCO No.	DATE	NAME
A	0032311	22Jan2013	LD
-	0009628	25Jan2011	LD

Parker
domnick hunter
Parker Hannifin ltd
Dukesway, Team Valley,
Gateshead, Tyne & Wear
England NE11 0PZ
TEL +44 (0)191 402 9000
FAX +44 (0)191 482 6296
www.domnickhunter.com

THIS DOCUMENT IS COPYRIGHT AND IS THE PROPERTY OF PARKER HANNIFIN LTD. IT MUST NOT BE COPIED IN WHOLE OR PART, USED FOR MANUFACTURE OF, OR OTHERWISE DISCLOSED WITHOUT PRIOR WRITTEN CONSENT OF THE COMPANY
©2010 A1

MATERIAL	SCALE		DRAWN	CHECKED	APPROVED	TITLE	DRG. No	SHEET
GEN. ARRGT.	1 : 1	NAME	LD	KW	KW	BAF-015 SALES	101-10106	1 of 1
		DATE	25Jan2011	07Sep2012	07Sep2012			