BASED ON B.S.8888

DO NOT SCALE IF IN DOUBT ASK

DIMENSIONS IN MILLIMETRES

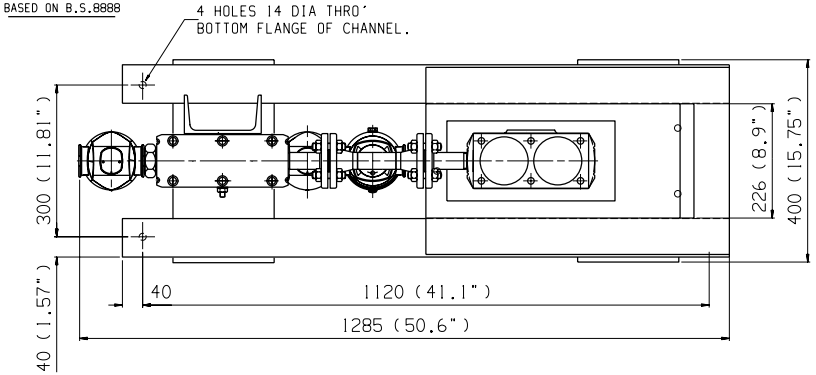

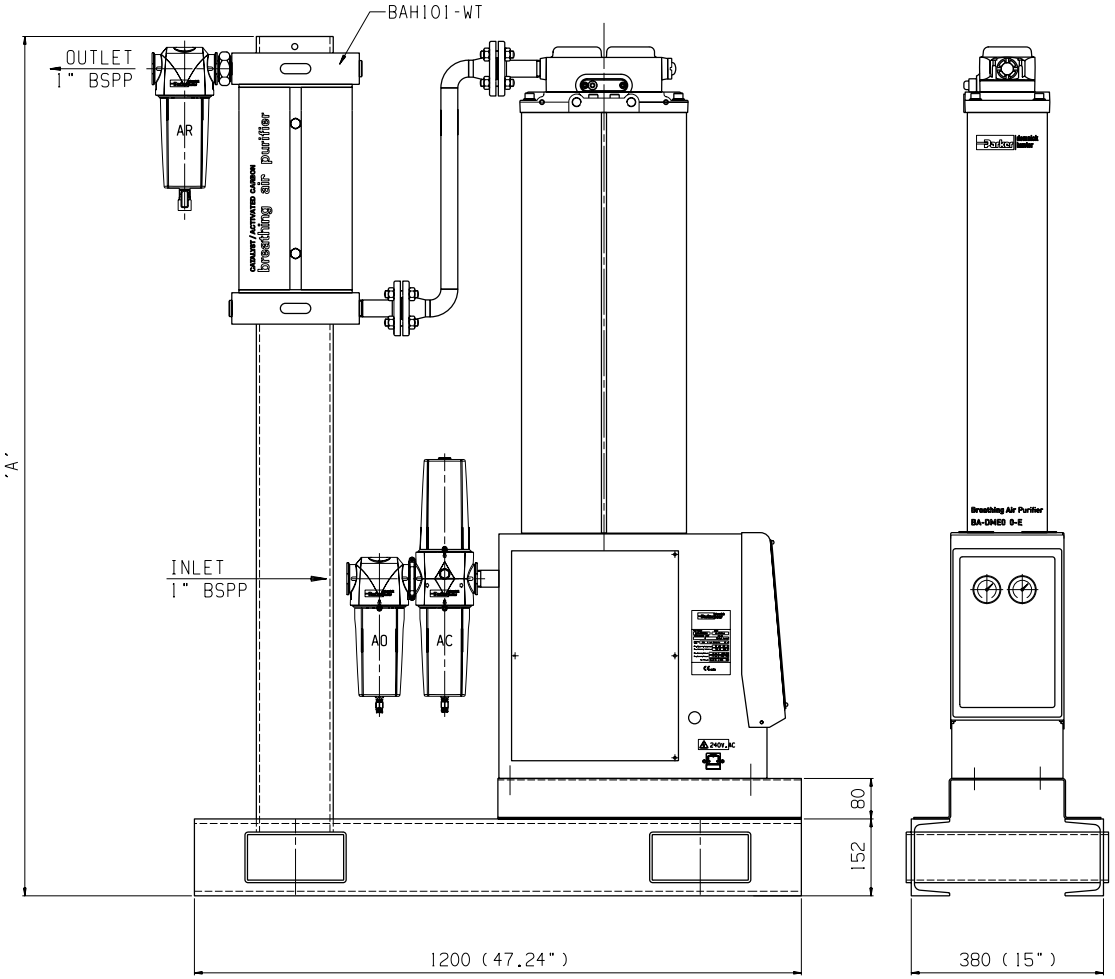

TECHNICAL SPECIFICATION
General Notes

Flow Rates @ 7barg - 50 To 60 L/s / 106 to 127 cfm
Max. Working Pressure 16 barg / 232 psig
Min. Operating Pressure 4 barg / 58 psig
Max. Recommended Inlet Temperature 30°C / 86°F
Min. Recommended Inlet Temperature 1.5°C / 35°F

Dewpoint - -40°C/°F Nominal, -70°C / -94°F Optional

NOTES

1. DRYER & FILTERS TO BE FULLY ASSEMBLED
2. COMPLETE UNIT TO BE PACKED IN CRATE WITH USER GUIDE

CAT No.	'A'	FLOW	WEIGHT	OUTLET BSPP	AO FILTER	AA FILTER	AR FILTER
BA-DME060DS-E	72.1"	127cfm	490lbs	1	AO025EGFX-BA	AC025EGFI-BA	AR025EGFX-BA
	1831mm	61L/s	222Kg				
BA-DME060-E	72.1"	127cfm	490lbs	1	AO025EGFX-BA	AC025EGFI-BA	AR025EGFX-BA
	1831mm	61L/s	222Kg				
BA-DME050DS-E	66.89"	106cfm	463lbs	1	AO025EGFX-BA	AC025EGFI-BA	AR025EGFX-BA
	1699mm	50L/s	210Kg				
BA-DME050-E	66.89"	106cfm	463lbs	1	AO025EGFX-BA	AC025EGFI-BA	AR025EGFX-BA
	1699mm	50L/s	210Kg				

GENERAL TOLERANCES UNLESS OTHERWISE STATED

MACHINED DIMENSIONS
.XX ±0.13 UP TO 300 ±0.3
.X ±0.25 OVER 300 TO 600 ±0.6

POSITIONAL TOLERANCE
PLAIN HOLES ±0.13
TAPPED HOLES ±0.26
CONCENTRICITY TOLERANCE 0.13 TIR

MACHINED SURFACES INDICATED THUS
SURFACE TEXTURE TO BS 1134
VALUES IN MICROMETRES

ANGLES ±1/2°(EXCEPT CHAMFERS)

METRIC THREADS TO BS 3643 MED. CLASS
EXTERNAL 6g INTERNAL 6H
PIPE THREADS
PRESSURE TIGHT TO BS 21

SHEET METALWORK & FABRICATIONS
SHEET METALWORK DIMENSIONS
UP TO 500 ±0.5
OVER 500 TO 1000 ±1.0
OVER 1000 ±1.5

FABRICATED PARTS DIMENSIONS
UP TO 500 ±2
OVER 500 TO 1000 ±4
OVER 1000 ±6

POSITIONAL TOLERANCE FOR PLAIN & TAPPED HOLES
UP TO 500 ±1.0
OVER 500 ±2.0

REV	DCO No.	DATE	NAME
-	0044158	50ct2013	JMP

Parker Hannifin Manufacturing Ltd.
donnick hunter Filtration & Separation Division
Dukeway, Team Valley Trading Estate
Gateshead, Tyne & Wear
England NE11 0PZ
TEL +44 (0)191 402 9000
FAX +44 (0)191 482 6296
www.parker.com/dhfns

THIS DOCUMENT IS COPYRIGHT AND IS THE PROPERTY OF PARKER HANNIFIN LTD. IT MUST NOT BE COPIED IN WHOLE OR PART, USED FOR MANUFACTURE OF, OR OTHERWISE DISCLOSED WITHOUT PRIOR WRITTEN CONSENT OF THE COMPANY
©2013 A1

MATERIAL	SCALE	DRAWN	CHECKED	APPROVED	TITLE	DRG. No	SHEET
GEN. ARRGT.	1 : .2	NAME JMP	LD	KW	BA-DME050-060/DS-E SALES	101-10329	1 of 1
		DATE 50ct2013	90ct2013	90ct2013			