BASED ON B.S.8888

DO NOT SCALE IF IN DOUBT ASK

DIMENSIONS IN MILLIMETRES

TECHNICAL NOTES
********* *****

VOLTAGE OPTIONS: 230V/1PH/50-60HZ.
110V/1PH/50-60HZ.
24V DC.

MINIMUM PRESSURE: 4 BARG. (58 PSI).
MAXIMUM PRESSURE: 13 BARG. (188.5 PSI).
MINIMUM TEMPERATURE: 5 °C. (41°F).
MAXIMUM TEMPERATURE: 50 °C. (122°F).
WEIGHT: 90 KG. (198 LBS)

FILTERS - AA030EBFX. AR030EBMX
IT IS RECOMMENDED A WATER SEPARATOR IS FITTED BEFORE THE AA FILTER - WS030EBFX

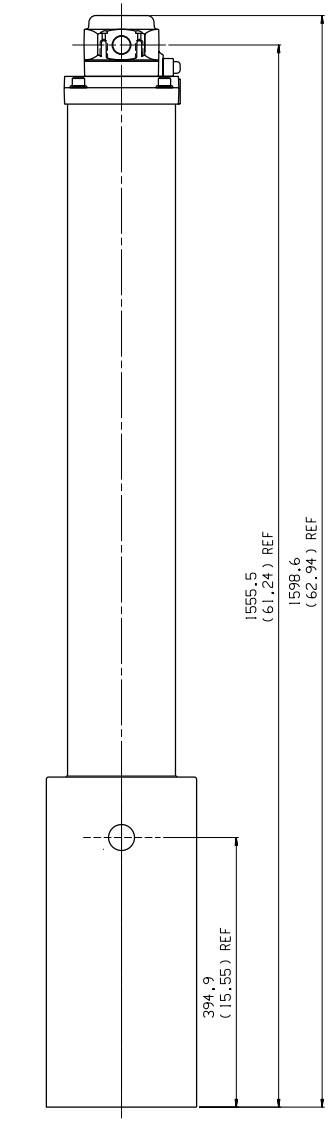

FILTERS OMITTED ON ABOVE VIEW FOR CLARITY.

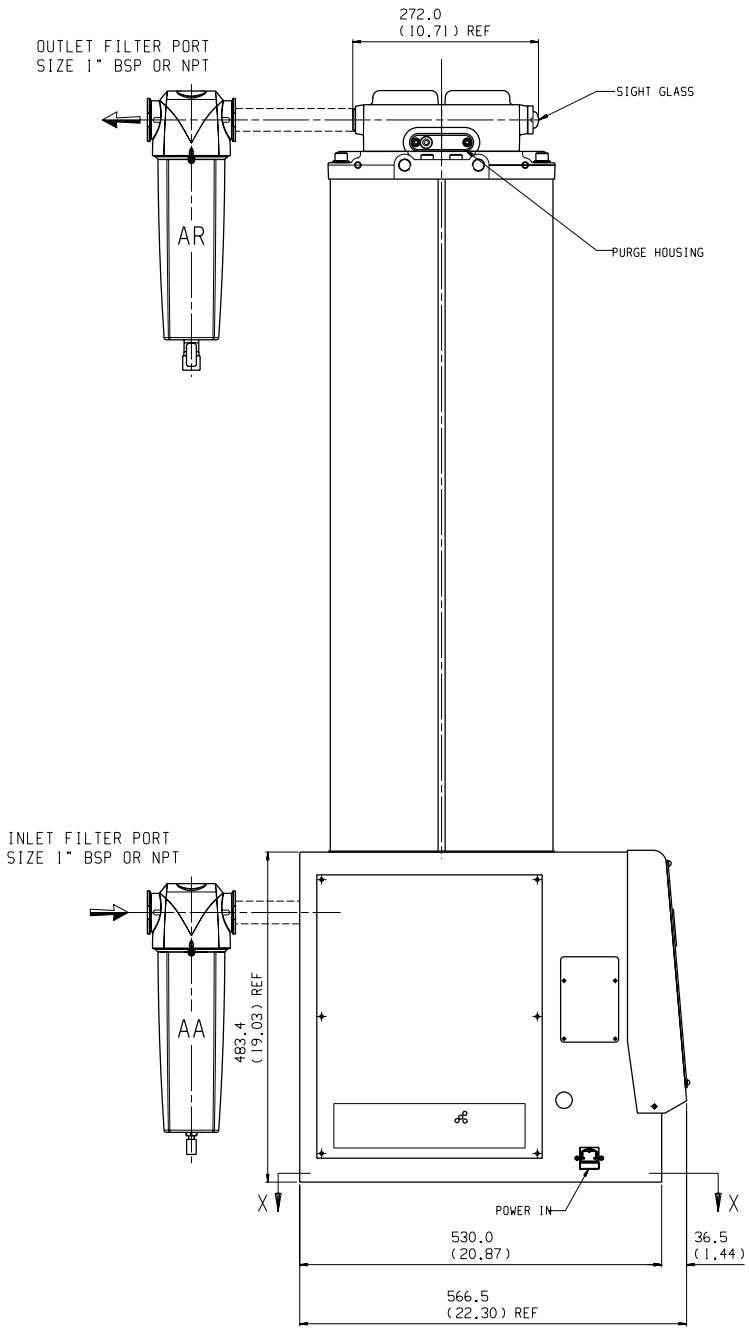

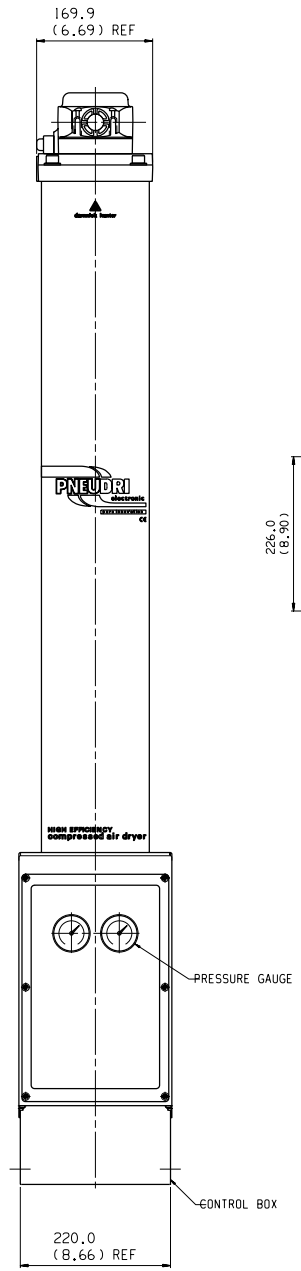

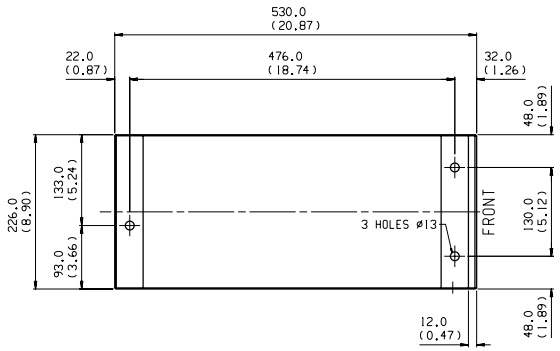

BOLT-DOWN HOLE DETAIL

LOOKING DOWN ON X-X

GENERAL TOLERANCES UNLESS OTHERWISE STATED

MACHINED DIMENSIONS
.XX ±0.13 UP TO 300 ±0.3
.X ±0.25 OVER 300 TO 600 ±0.5

POSITIONAL TOLERANCE
PLAIN HOLES ø0.13
TAPPED HOLES ø0.25
CONCENTRICITY TOLERANCE 0.13 TIR

MACHINED SURFACES INDICATED THUS
SURFACE TEXTURE TO BS 1134
VALUES IN MICROMETRES

ANGLES ±1/2°(EXCEPT CHAMFERS)

METRIC THREADS TO BS 3643 MED. CLASS
EXTERNAL 6g INTERNAL 6H
PIPE THREADS
PRESSURE TIGHT TO BS 21

SHEET METALWORK & FABRICATIONS
SHEET METALWORK DIMENSIONS
UP TO 500 ±0.5
OVER 500 TO 1000 ±1.0
OVER 1000 ±1.5

FABRICATED PARTS DIMENSIONS
UP TO 500 ±2
OVER 500 TO 1000 ±4
OVER 1000 ±6

POSITIONAL TOLERANCE FOR PLAIN & TAPPED HOLES
UP TO 500 ø1.0
OVER 500 ø2.0

REV	DCO No.	DATE	NAME
0	56148	24Aug2006	SM

DOMNICK HUNTER LIMITED
DUKESWAY. TEAM VALLEY.
GATESHEAD,TYNE & WEAR.
NE11 0PZ. ENGLAND.
Tel. 0191 402 9000
Telex: 537282
Telefax: 0191 482 6296

DME060

THE ORIGINAL OF THIS DRAWING IS COPYRIGHT AND CONTAINS CONFIDENTIAL INFORMATION,IT IS THE PROPERTY OF DOMNICK HUNTER LIMITED WITHOUT WHOSE PERMISSION IT MAY NOT BE COPIED,SHOWN OR HANDED TO A THIRD PARTY OR OTHERWISE USED AND IT IS TO BE RETURNED PROMPTLY UPON REQUEST TO DOMNICK HUNTER. ©2006 A1

MATERIAL	SCALE		DRAWN	CHECKED	APPROVED	TITLE	DRG. No	SHEET
GEN. ARRGT.	1 : .27	NAME	SM	MG	AG	DME060 AA AND AR EVO FILTERS	101-9275	1 of 1
		DATE	24Aug2006	25Aug2006	25Aug2006			