From Serial Number: 46438A to Date

Pneudri Midi Plus Dryer

DME012 - DME040

Parts Manual / Manual de Piezas /
Manuel de Pieces de Rechange / Ersatzteil-Handbuch

aerospace
climate control
electromechanical
filtration
fluid & gas handling
hydraulics
pneumatics
process control
sealing & shielding

Parker

domnick hunter

ENGINEERING YOUR SUCCESS.

NOTES

1) All drawings shown are the latest versions only.
2) Items not specified by part numbers are not separately available. For items not detailed please contact the address at the bottom of the page.
3) For equipment with serial number prior to this manual please refer to supplementary spares listing relevant to this issue.
4) **How to use this manual**

i) From drawing on page 3 select section of interest (eg item 1 is shown in section A1).
ii) Turn to required section A1 (indicated on top of page).
iii) From the drawing at the beginning of the section identify the required item.
iv) Items are detailed on the pages following the drawing within each section of interest. Contents of spares kits are listed directly below the kit description.

REMARQUES

1) Tous les schémas illustrés correspondent aux dernières versions uniquement.
2) Les éléments non identifiés par des numéros de référence ne sont pas disponibles séparément. Pour ces éléments, contacter l'adresse au bas de cette page.
3) Pour le matériel dont le numéro de série est inférieur à ce manuel, consulter la liste de pièces supplémentaires correspondant à cette version.
4) **Comment utiliser ce manuel**

i) A partir du schéma à la page 3, sélectionner la partie qui vous intéresse (par exemple l'élément 1 est traité à la section A1).
ii) Passer à la section A1 concernée (indiquée en haut de page).
iii) A partir du schéma en fin de section, identifier l'élément nécessaire.
iv) Les éléments sont détaillés aux pages qui suivent le schéma dans chaque section. Le contenu des kits de pièces de rechange est donné directement au-dessous de la description du kit.

HINWEISE

1) Alle enthaltenen Zeichnungen beziehen sich nur auf die neuesten Versionen.
2) Posten, bei denen die Angabe der Teilenummer fehlt, sind nicht einzeln zu beziehen. Für nicht aufgeführte Posten wenden Sie sich an die untenstehende Anschrift.
3) Angaben zu Maschinen mit Seriennummern vor diesem Handbuch finden Sie in der jeweils geltenden, ergänzenden Ersatzteilliste.
4) **Benutzung dieses Handbuchs.**

a) Suchen Sie in der Zeichnung auf Seite 3 den Sie interessierenden Abschnitt (z. B. Posten 1 ist im Abschnitt A1 zu finden).
b) Blättern Sie zu dem gewünschten Abschnitt A1 (am Seitenanfang angegeben).
c) Suchen Sie den gewünschten Posten auf der Zeichnung am Beginn des Abschnitts.
d) Detaillierte Beschreibungen der Posten sind auf den Seiten zu finden, die der Zeichnung in dem Sie interessierenden Abschnitt folgen. Der Inhalt der Ersatzteilsätze ist direkt unter der Satzbeschreibung aufgelistet.

NOTAS

1) Todos los dibujos que aparecen son sólo las últimas versiones.
2) Los elementos no especificados mediante números de referencia, no se encuentran disponibles por separado. Para obtener información sobre los elementos no detallados, póngase en contacto con la dirección incluida en la parte inferior de la página.
3) En equipos con número de serie anteriores a este manual, consulte la lista de repuestos suplementaria relativa a este tema.
4) **Uso del presente manual.**

i) En el dibujo de la página 3, seleccione la sección de interés (p.ej.: el elemento 1 aparece en la sección A1).
ii) Vuelva a la sección A1 necesaria (indicada en la parte superior de la página).
iii) En el dibujo del comienzo de la sección, identifique el elemento necesario.
iv) Los elementos aparecen detallados en las páginas siguientes al dobujo dentro de cada sección de interés. El contenido de los kits de epuestos aparecen listados directamente a continuación de la descripción del kit.

5) **NOTES REMARQUES HINWEISE NOTAS**

***** PNEUDRI MIDI DESICCANT DRYERS *****

MIDI DRYER SYSTEMS

	l/s @ 7barg	scfm @ 100psig
DME 012	12	25
DME 015	15	32
DME 020	20	42
DME 025	25	53
DME 030	31	65
DME 040	42	88
DME 012 DDS	12	25
DME 015 DDS	15	32
DME 020 DDS	20	42
DME 025 DDS	25	53
DME 030 DDS	31	65
DME 040 DDS	42	88

A0 DME 12 - 40 MIDI DRYER

7Apr04

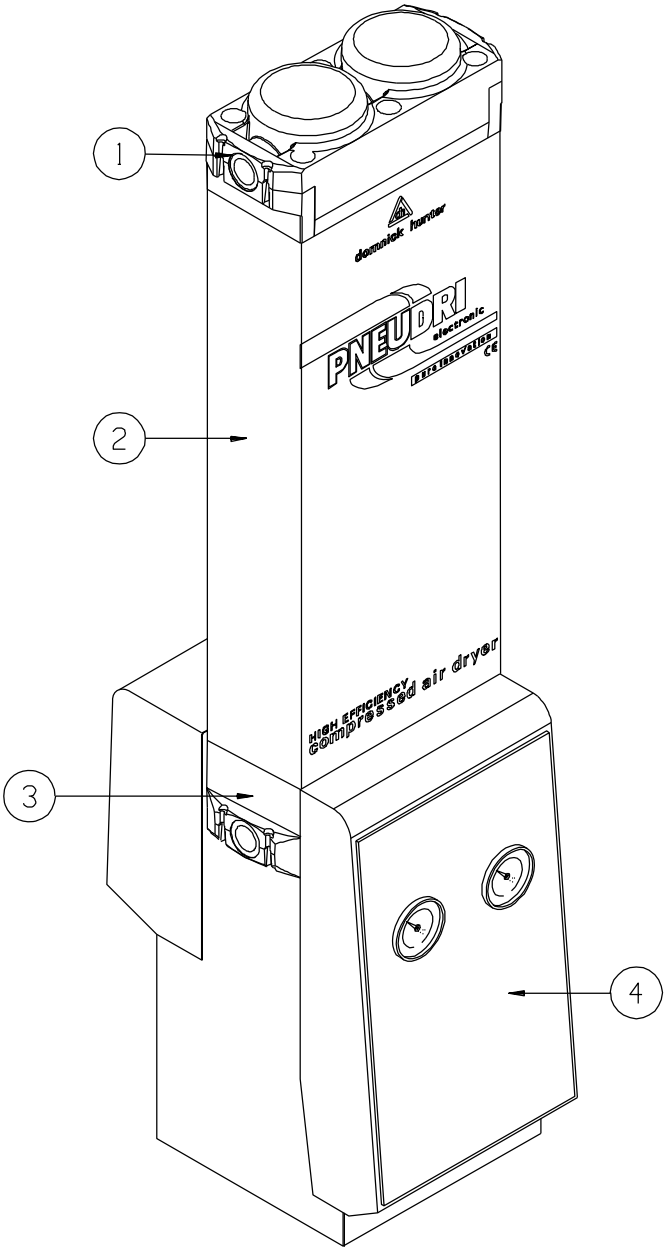

5 CONT. & INST DDS

OPTIONS

6 DRYFIL MS

A0 DME 12 - 40 MIDI DRYER

7Apr04

Ref.	Part No	Description	Qty
1		MIDI OUTLET HEAD ASSY	1
2		COLUMN ASSEMBLY DRYFIL AA	1
3		MIDI INLET HEAD ASSY	1
4		CONTROL BOX ASSY	1
5		CONT & INSTR DDS	1
6		COLUMN ASSEMBLY DRYFIL MS	1

domnick hunter Limited,Dukesway,Team Valley Trading Estate,Gateshead,England,NE11 0PZ. Tel: +44 (0)191 4029000 Fax: +44(0)191 4826296

A 1 MIDI OUTLET HEAD ASSY

7Apr04

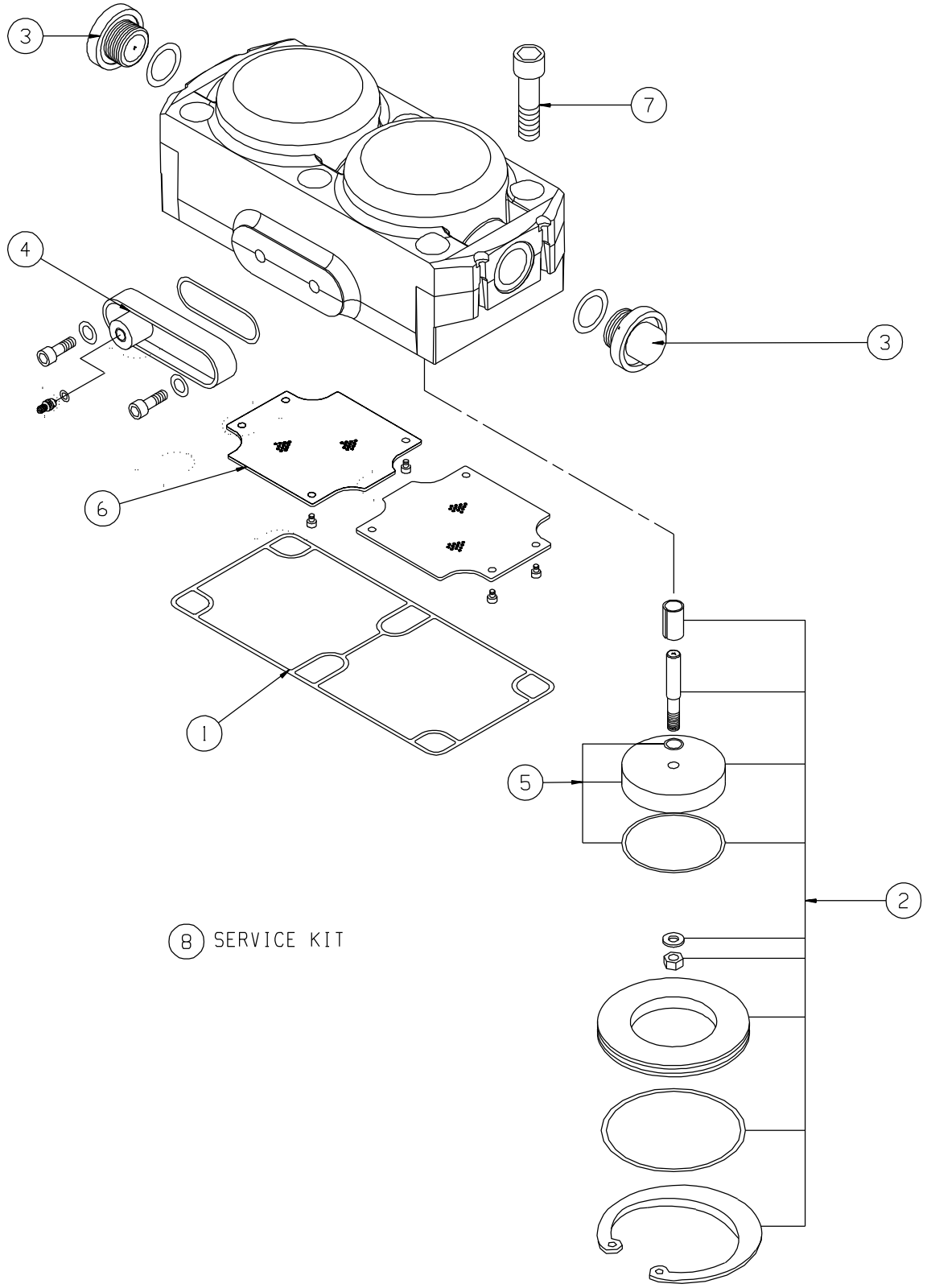

domnick hunter Limited,Dukesway,Team Valley Trading Estate,Gateshead,England,NE11 0PZ. Tel: +44 (0)191 4029000 Fax: +44(0)191 4826296

A 1 MIDI OUTLET HEAD ASSY

7Apr04

Ref.	Part No	Description	Qty
1	608201545	MOULDED NITRILE GASKET	1
		Consisting of	
		MOULDED GASKET E EXTRUSION NBR	1
2	608201270	CHECK VALVE ASSEMBLY	1
		Consisting of	
		O-RING BS010 HIGH NIT.	2
		BS152 O-RING HIGH NITRILE	2
		O-RING BS329 MEDIUM NITRILE	2
		BOX 175LG x 95 x 95	1
		MIDI VALVE SEAT	2
		CIRCLIP SIZE 0880 - D1300	2
		VALVE STEM	2
		M6 NYLOC NUT ST.ST.	2
		M6 WASHER ST.ST.	2
		SHLT. VALVE BUSH	2
		OUTLET VALVE DISC - RAILWAY	2
		LOCTITE ADHESIVE 480	0
3	608201509	MIDI SIGHTGLASS KIT	2
		Consisting of	
		SILICA GEL ORANGE	1.2
		O-RING (BS1806-122)	1
		BOX 80 X 45 X 45 NO LOGO	1
		PORT BLANKING LABEL 0009G	1
		SIGHT GLASS MOULDING - CLEAR	1
		STARLOCK WASHER TYPE N1305-62	1
		POROUS PAD DIA 15.5	1
4	608201510	MIDI PURGE ASSEMBLY KIT	1
		Consisting of	
		O-RING BS031 HIGH NIT.	1
		O-RING BS109 HIGH NITRILE	1
		BOX 145 X 87 X 87 NO LOGO	1
		PURGE HOUSING (M/C'D)	1
		PURGE VALVE	1
		M6 ANTI-VIBRATION WASHER	2

MIDI OUTLET HEAD ASSY

7Apr04

Ref.	Part No	Description	Qty
		SKT.HD.SRW.M6x20 Z.PLT	2
		BLACK SEMIGLOSS/ER/107SG	0.001
5	608203307	KIT.OUTLET DISCS & O-RINGS	1
		Consisting of	
		O-RING BS010 HIGH NIT.	2
		O-RING BS329 MEDIUM NITRILE	2
		M6 NYLOC NUT ST.ST.	2
		M6 WASHER ST.ST.	2
		OUTLET VALVE DISC - RAILWAY	2
		LOCTITE ADHESIVE 480	0
6	608201512	MIDI SUPPORT SCREEN KIT	1
		Consisting of	
		MIDI SUPPORT SCREEN	2
		CH.HD.SLT.SRW. M3x4	8
7	608201515	MIDI BOLT KIT	1
		Consisting of	
		SKT.HD.SRW.M12x50 Z.PLT	8
		SKT.HD.BOLT M12 X 110 Z.PLT	4
8	608201593	SK- OUTLET HEAD	1
		Consisting of	
		BOX 150LG X 100 X 100	1
		MIDI SIGHTGLASS KIT	1
		MIDI SUPPORT SCREEN KIT	1
		MOULDED VITON GASKET KIT	1
		KIT.CHECK VALVE DISCS	2

A 2

COLUMN ASSEMBLY DRYFIL AA

7Apr04

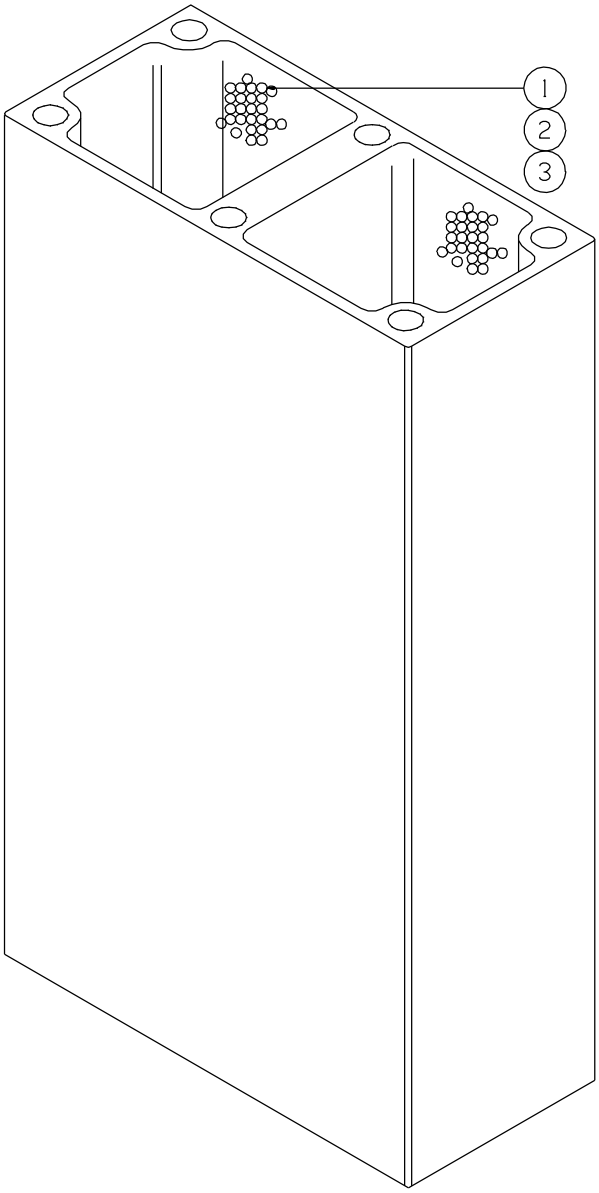

	ACTIVATED ALUMINA KIT DETAILS				
	ITEM No 1	ITEM No 2	ITEM No 3	DRYFIL AA KITS	
DME 012		1		608201819	4
DME 015	2	1		608201820	5
DME 020		2		608201821	6
DME 025	2	2		608201822	7
DME 030		3		608201823	8
DME 040			1	608201824	9

A 2

7Apr04

COLUMN ASSEMBLY DRYFIL AA

Ref.	Part No	Description	Qty
1	608201780	1KG DRYFIL A.A. KIT	1
		Consisting of	
		ACTIVATED ALUMINA D2.5-5	1
		DESICCANT PACKING LABEL	1
		HUMIDITY INDICATOR	1
		DRYFIL AA DATA SHEET	1
		CABLE TIE	1
		POLYTHENE BAG 12 x 18	1
2	608201781	5KG DRYFIL A.A. KIT	1
		Consisting of	
		ACTIVATED ALUMINA D2.5-5	5
		DESICCANT PACKING LABEL	1
		HUMIDITY INDICATOR	1
		DRYFIL AA DATA SHEET	1
		CABLE TIE	1
		POLYTHENE BAG 15 x 20	1
3	608201782	18KG DRYFIL A.A. KIT	1
		Consisting of	
		ACTIVATED ALUMINA D2.5-5	18
		DESICCANT PACKING LABEL	1
		HUMIDITY INDICATOR	1
		DRYFIL AA DATA SHEET	1
		CABLE TIE	1
		POLYTHENE BAG 24 x 36	1
4	608201819	DRYFIL DME012 AA	1
		Consisting of	
		MIDI SUPPORT SCREEN KIT	2
		MOULDED NITRILE GASKET	2
		5KG DRYFIL A.A. KIT	1
5	608201820	DRYFIL DME015 AA	1
		Consisting of	
		MOULDED GASKET E EXTRUSION NBR	2

COLUMN ASSEMBLY
DRYFIL AA

7Apr04

Ref.	Part No	Description	Qty
		P.BOX 250x250x400LG dh LOGO	1
		MIDI SUPPORT SCREEN	2
		CH.HD.SLT.SRW. M3x4	8
		1KG DRYFIL A.A. KIT	2
		5KG DRYFIL A.A. KIT	1
6	608201821	DRYFIL DME020 AA	1
		Consisting of	
		MIDI SUPPORT SCREEN KIT	2
		MOULDED NITRILE GASKET	2
		5KG DRYFIL A.A. KIT	2
7	608201822	DRYFIL DME025 AA	1
		Consisting of	
		MIDI SUPPORT SCREEN KIT	2
		MOULDED NITRILE GASKET	2
		1KG DRYFIL A.A. KIT	2
		5KG DRYFIL A.A. KIT	2
8	608201823	DRYFIL DME030 AA	1
		Consisting of	
		MOULDED GASKET E EXTRUSION NBR	2
		P.BOX 250x250x400LG dh LOGO	1
		MIDI SUPPORT SCREEN	2
		CH.HD.SLT.SRW. M3x4	8
		5KG DRYFIL A.A. KIT	3
9	608201824	DRYFIL DME040 AA	1
		Consisting of	
		MIDI SUPPORT SCREEN KIT	2
		MOULDED NITRILE GASKET	2
		18KG DRYFIL A.A. KIT	1

A 3 MIDI INLET HEAD ASSY

7Apr04

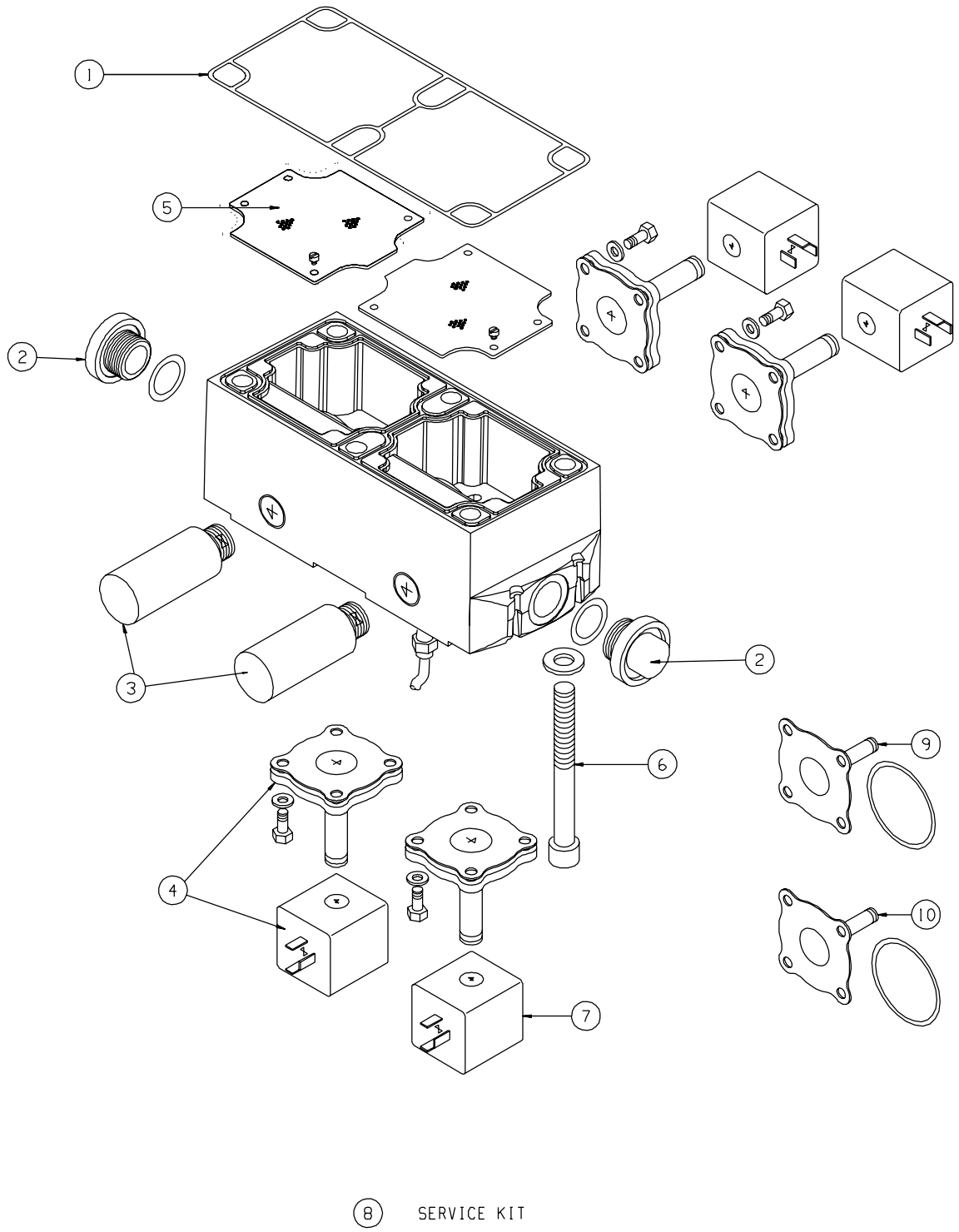

domnick hunter Limited,Dukesway,Team Valley Trading Estate,Gateshead,England,NE11 0PZ. Tel: +44 (0)191 4029000 Fax: +44(0)191 4826296

A 3 MIDI INLET HEAD ASSY

7Apr04

Ref.	Part No	Description	Qty
1	608201545	MOULDED NITRILE GASKET	1
		Consisting of	
		MOULDED GASKET E EXTRUSION NBR	1
2	608201509	MIDI SIGHTGLASS KIT	2
		Consisting of	
		SILICA GEL ORANGE	1.2
		O-RING (BS1806-122)	1
		BOX 80 X 45 X 45 NO LOGO	1
		PORT BLANKING LABEL 0009G	1
		SIGHT GLASS MOULDING - CLEAR	1
		STARLOCK WASHER TYPE N1305-62	1
		POROUS PAD DIA 15.5	1
3	608200347	KIT: EXHAUST SILENCER	1
		Consisting of	
		1/2 EXHAUST SILENCER	2
4	608203373	N/O N/C 2/2 SOLENOID VALVE KIT	1
		Consisting of	
		BOX 150LG X 100 X 100	1
		N/C 2/2 SOL OPERATOR ASSY	2
		N/O 2/2 SOL OPERATOR ASSY	2
		M6 ANTI-VIBRATION WASHER	16
		1/4IN.X 20 UNC X 5/8LG.SKT.HD.	16
5	608201512	MIDI SUPPORT SCREEN KIT	1
		Consisting of	
		MIDI SUPPORT SCREEN	2
		CH.HD.SLT.SRW. M3x4	8
6	608201515	MIDI BOLT KIT	1
		Consisting of	
		SKT.HD.SRW.M12x50 Z.PLT	8
		SKT.HD.BOLT M12 X 110 Z.PLT	4

MIDI INLET HEAD ASSY

7Apr04

Ref.	Part No	Description	Qty
7	608201528	24VDC SOLENOID COIL	4
		Consisting of	
		P.BOX 170 x 120 x 120 NO LOGO	1
		24VDC SOLENOID COIL	1
8	608201592	SK-INLET DME012-040	1
		Consisting of	
		BOX 150LG X 100 X 100	1
		KIT: EXHAUST SILENCER	1
		24VDC SOLENOID COIL	4
9	608203233	NO 2/2 SOL DIAPHRAGM KIT	2
		Consisting of	
		BOX 145 X 87 X 87 NO LOGO	1
		M6 INTERNAL ANTI-VIB WASHER	4
		1/4IN.X 20 UNC X 5/8LG.SKT.HD.	4
		NO 2/2 DIAPHRAGM (FV 145-489)	1
10	608203234	NC 2/2 SOL DIAPHRAGM KIT	2
		Consisting of	
		BOX 145 X 87 X 87 NO LOGO	1
		M6 INTERNAL ANTI-VIB WASHER	4
		1/4IN.X 20 UNC X 5/8LG.SKT.HD.	4
		NC 2/2 DIAPHRAGM (FV145-490)	1

A 4 CONTROL BOX ASSY

7Apr04

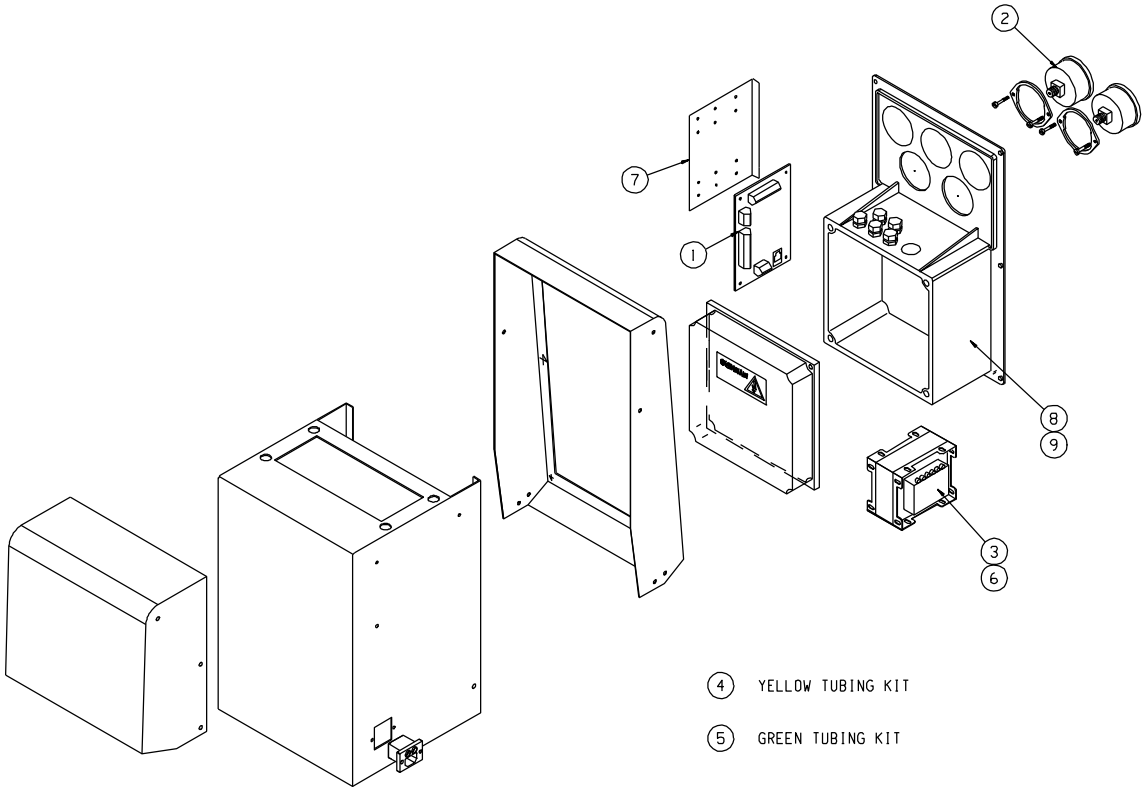

domnick hunter Limited,Dukesway,Team Valley Trading Estate,Gateshead,England,NE11 0PZ. Tel: +44 (0)191 4029000 Fax: +44(0)191 4826296

A 4 CONTROL BOX ASSY

7Apr04

Ref.	Part No	Description	Qty
1	608202449	KIT.ELEC MIDI TIMER	1
		Consisting of	
		DME WIRING SCH 230V 50-60HZ	1
		BOX 202LG X 135 X 100 NO LOGO	1
		ELECTRONIC MIDI TIMER UNIT MK2	1
2	608200162	KIT: PRESSURE GAUGE	2
		Consisting of	
		OUTLET PRESSURE GUAGE	1
3	608201517	230V MIDI TRANSFORMER KIT	1
		Consisting of	
		P.BOX 170 x 120 x 120 NO LOGO	1
		230V NOMINAL TRANSFORMER ASSY	1
4	608200140	NYLON TUBE SPARES PACK	1
		Consisting of	
		4MM YELLOW TUBING	10
5	608200141	NYLON TUBE SPARES PACK	1
		Consisting of	
		4MM GREEN TUBING	10
6	608201534	TRANSFORMER KIT 110V	1
		Consisting of	
		P.BOX 170 x 120 x 120 NO LOGO	1
		110V NOMINAL TRANSFORMER ASSY	1
7	608202446	KIT.TIMER BRACKET	1
		Consisting of	
		BOX 160LG x 52 x 52 NO LOGO	1
		PSA2 & 3 TIMER BRACKET	1

CONTROL BOX ASSY

7Apr04

Ref.	Part No	Description	Qty
8	608202447	KIT.TIMER ASSEMBLY 230V	1
		Consisting of	
		DME WIRING SCH 230V 50-60HZ	1
		P.BOX 245 x 385 x 165	1
		MIDI TIMER ASSY 230V 50-60HZ	1
9	608202448	KIT.TIMER ASSEMBLY 110V	1
		Consisting of	
		DME WIRING SCH 110V 50-60HZ	1
		P.BOX 245 x 385 x 165	1
		MIDI TIMER ASSY 110V 50-60HZ	1

A 5 CONT & INSTR DDS

7Apr04

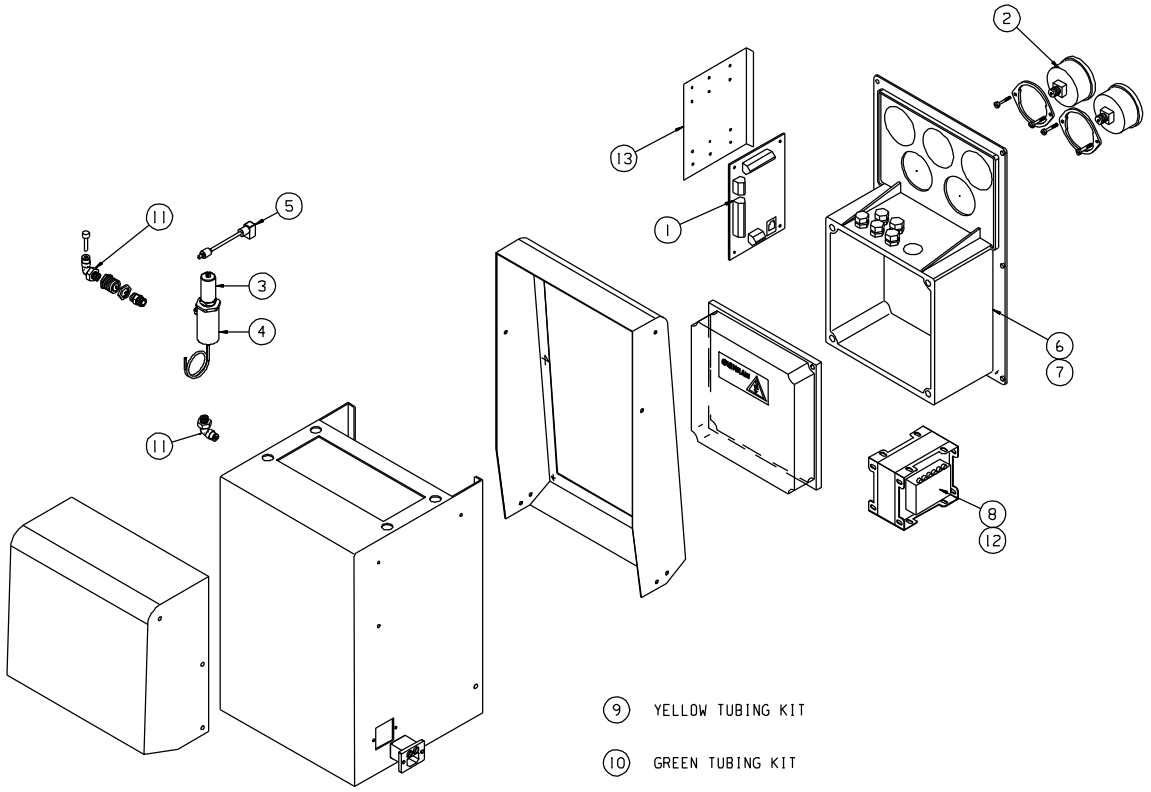

domnick hunter Limited,Dukesway,Team Valley Trading Estate,Gateshead,England,NE11 0PZ. Tel: +44 (0)191 4029000 Fax: +44(0)191 4826296

A 5 CONT & INSTR DDS

7Apr04

Ref.	Part No	Description	Qty
1	608202449	KIT.ELEC MIDI TIMER	1
		Consisting of	
		DME WIRING SCH 230V 50-60HZ	1
		BOX 202LG X 135 X 100 NO LOGO	1
		ELECTRONIC MIDI TIMER UNIT MK2	1
2	608200162	KIT: PRESSURE GAUGE	2
		Consisting of	
		OUTLET PRESSURE GUAGE	1
3	608203425	KIT: HYG. TRANSMITTER ELEMENT	1
		Consisting of	
		HYG. TRANSMITTER ELEMENT ASSY	1
4	608203426	KIT: HYG. HOUSING ASSY. MIDI	1
		Consisting of	
		O-RING 31 I.D. X 2 SEC. H.NIT.	1
		BOX	1
		INLET LABEL	1
		OUTLET LABEL	1
		CABLE TIE	1
		WIRING PAD	1
		TUBING PLUG	1
		PTFE TUBING	0.3
		1/8" x 4MM MALE ELBOW	1
		NIPPLED CONN. 1/8" BSP	1
		BULKHEAD 1/8IN.	1
		SWIVEL ELBOW ADAPTOR	1
		HYGROMETER SENSOR HOUSING	1
5	608202288	KIT.HYGROMETER PLUG	1
		Consisting of	
		SENSOR CABLE - 1M	1
6	608202447	KIT.TIMER ASSEMBLY 230V	1

CONT & INSTR DDS

7Apr04

Ref.	Part No	Description	Qty
		Consisting of	
		DME WIRING SCH 230V 50-60HZ	1
		P.BOX 245 x 385 x 165	1
		MIDI TIMER ASSY 230V 50-60HZ	1
7	608202448	KIT.TIMER ASSEMBLY 110V	1
		Consisting of	
		DME WIRING SCH 110V 50-60HZ	1
		P.BOX 245 x 385 x 165	1
		MIDI TIMER ASSY 110V 50-60HZ	1
8	608201534	TRANSFORMER KIT 110V	1
		Consisting of	
		P.BOX 170 x 120 x 120 NO LOGO	1
		110V NOMINAL TRANSFORMER ASSY	1
9	608200140	NYLON TUBE SPARES PACK	1
		Consisting of	
		4MM YELLOW TUBING	10
10	608200141	NYLON TUBE SPARES PACK	1
		Consisting of	
		4MM GREEN TUBING	10
11	608201527	1/8 X 4MM ELBOW KIT	1
		Consisting of	
		1/8" x 4MM MALE ELBOW	2
12	608201517	230V MIDI TRANSFORMER KIT	1
		Consisting of	
		P.BOX 170 x 120 x 120 NO LOGO	1
		230V NOMINAL TRANSFORMER ASSY	1
13	608202446	KIT.TIMER BRACKET	1

CONT & INSTR DDS

7Apr04

Ref.	Part No	Description	Qty
		Consisting of	
		BOX 160LG x 52 x 52 NO LOGO	1
		PSA2 & 3 TIMER BRACKET	1

A 6

7Apr04

COLUMN ASSEMBLY DRYFIL MS

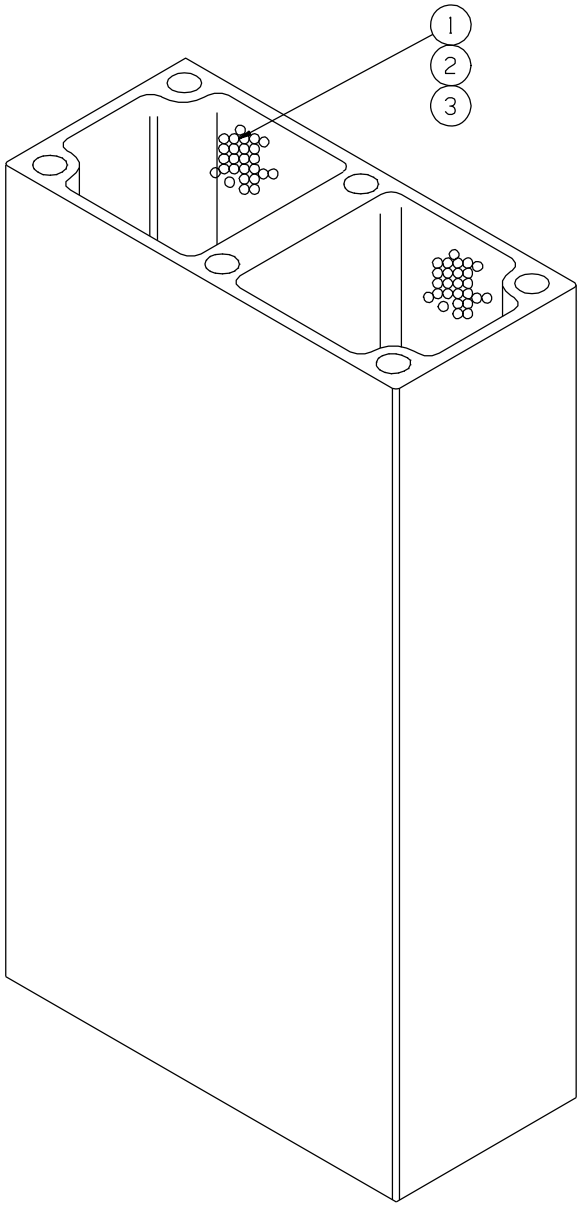

	MOLECULAR SIEVE KIT DETAILS				
	ITEM No 1	ITEM No 2	ITEM No 3	DRYFIL MS KITS	
DME 012		1		608201583	4
DME 015	2	1		608201584	5
DME 020		2		608201585	6
DME 025	2	2		608201586	7
DME 030		3		608201587	8
DME 040			1	608201588	9

A 6

7Apr04

COLUMN ASSEMBLY DRYFIL MS

Ref.	Part No	Description	Qty
1	608200193	1KG DESICCANT KIT	1
		Consisting of	
		MOLECULAR SIEVE	1
		DESICCANT PACKING LABEL	1
		HUMIDITY INDICATOR	1
		CABLE TIE	1
		POLYTHENE BAG 12 x 18	1
		POLYPROPYLENE BUCKET - 1.8L	1
2	608200194	4KG DESICCANT KIT	1
		Consisting of	
		MOLECULAR SIEVE	4
		MOL.SEIVE DATA SHEET.	1
		DESICCANT PACKING LABEL	1
		HUMIDITY INDICATOR	1
		CABLE TIE	1
		POLYTHENE BAG 15 x 20	1
		MIDI COLUMN PAD 'E' SECTION	4
3	608200195	15KG DESICCANT KIT	1
		Consisting of	
		MOLECULAR SIEVE	15
		MOL.SEIVE DATA SHEET.	1
		DESICCANT PACKING LABEL	1
		HUMIDITY INDICATOR	1
		CABLE TIE	1
		POLYTHENE BAG 24 x 36	1
4	608201583	DRYFIL DME012 MS	1
		Consisting of	
		MOULDED GASKET E EXTRUSION NBR	2
		P.BOX 250x250x400LG dh LOGO	1
		MIDI SUPPORT SCREEN	2
		CH.HD.SLT.SRW. M3x4	8
		4KG DESICCANT KIT	1

COLUMN ASSEMBLY
DRYFIL MS

7Apr04

Ref.	Part No	Description	Qty
5	608201584	DRYFIL DME015 MS	1
		Consisting of	
		MOULDED GASKET E EXTRUSION NBR	2
		P.BOX 250x250x400LG dh LOGO	1
		MIDI SUPPORT SCREEN	2
		CH.HD.SLT.SRW. M3x4	8
		1KG DESICCANT KIT	2
		4KG DESICCANT KIT	1
6	608201585	DRYFIL DME020 MS	1
		Consisting of	
		4KG DESICCANT KIT	2
		MIDI SUPPORT SCREEN KIT	1
		MOULDED NITRILE GASKET	2
7	608201586	DRYFIL DME025 MS	1
		Consisting of	
		MOULDED GASKET E EXTRUSION NBR	2
		P.BOX 250x250x400LG dh LOGO	1
		MIDI SUPPORT SCREEN	2
		CH.HD.SLT.SRW. M3x4	8
		1KG DESICCANT KIT	2
		4KG DESICCANT KIT	2
8	608201587	DRYFIL DME030 MS	1
		Consisting of	
		MOULDED GASKET E EXTRUSION NBR	2
		P.BOX 250x250x400LG dh LOGO	1
		MIDI SUPPORT SCREEN	2
		CH.HD.SLT.SRW. M3x4	8
		4KG DESICCANT KIT	3
9	608201588	DRYFIL DME040 MS	1
		Consisting of	
		MOULDED GASKET E EXTRUSION NBR	2
		P.BOX 600LG x 460 x 350	1
		MIDI SUPPORT SCREEN	2

COLUMN ASSEMBLY
DRYFIL MS

7Apr04

Ref.	Part No	Description	Qty
		CH.HD.SLT.SRW. M3x4	8
		15KG DESICCANT KIT	1

domnick hunter Limited,Dukesway,Team Valley Trading Estate,Gateshead,England,NE11 0PZ. Tel: +44 (0)191 4029000 Fax: +44(0)191 4826296

Parker Worldwide

AE – UAE, Dubai
Tel: +971 4 8127100
parker.me@parker.com

AR – Argentina, Buenos Aires
Tel: +54 3327 44 4129

AT – Austria, Wiener Neustadt
Tel: +43 (0)2622 23501-0
parker.austria@parker.com

AT – Eastern Europe,
Wiener Neustadt
Tel: +43 (0)2622 23501 900
parker.easteurope@parker.com

AU – Australia, Castle Hill
Tel: +61 (0)2-9634 7777

AZ – Azerbaijan, Baku
Tel: +994 50 2233 458
parker.azerbaijan@parker.com

BE/LU – Belgium, Nivelles
Tel: +32 (0)67 280 900
parker.belgium@parker.com

BR – Brazil, Cachoeirinha RS
Tel: +55 51 3470 9144

BY – Belarus, Minsk
Tel: +375 17 209 9399
parker.belarus@parker.com

CA – Canada, Milton, Ontario
Tel: +1 905 693 3000

CH – Switzerland, Etoy
Tel: +41 (0) 21 821 02 30
parker.switzerland@parker.com

CL – Chile, Santiago
Tel: +56 2 623 1216

CN – China, Shanghai
Tel: +86 21 5031 2525

CZ – Czech Republic, Klecany
Tel: +420 284 083 111
parker.czechrepublic@parker.com

DE – Germany, Kaarst
Tel: +49 (0)2131 4016 0
parker.germany@parker.com

DK – Denmark, Ballerup
Tel: +45 43 56 04 00
parker.denmark@parker.com

ES – Spain, Madrid
Tel: +34 902 33 00 01
parker.spain@parker.com

FI – Finland, Vantaa
Tel: +358 (0)20 753 2500
parker.finland@parker.com

FR – France, Contamine s/Arve
Tel: +33 (0)4 50 25 80 25
parker.france@parker.com

GR – Greece, Athens
Tel: +30 210 933 6450
parker.greece@parker.com

HK – Hong Kong
Tel: +852 2428 8008

HU – Hungary, Budapest
Tel: +36 1 220 4155
parker.hungary@parker.com

IE – Ireland, Dublin
Tel: +353 (0)1 466 6370
parker.ireland@parker.com

IN – India, Mumbai
Tel: +91 22 6513 7081-85

IT – Italy, Corsico (MI)
Tel: +39 02 45 19 21
parker.italy@parker.com

JP – Japan, Tokyo
Tel: +(81) 3 6408 3901

KR – South Korea, Seoul
Tel: +82 2 559 0400

KZ – Kazakhstan, Almaty
Tel: +7 7272 505 800
parker.easteurope@parker.com

LV – Latvia, Riga
Tel: +371 6 745 2601
parker.latvia@parker.com

MX – Mexico, Apodaca
Tel: +52 81 8156 6000

MY – Malaysia, Shah Alam
Tel: +60 3 7849 0800

NL – The Netherlands,
Oldenzaal
Tel: +31 (0)541 585 000
parker.nl@parker.com

NO – Norway, Ski
Tel: +47 64 91 10 00
parker.norway@parker.com

NZ – New Zealand, Mt Wellington
Tel: +64 9 574 1744

PL – Poland, Warsaw
Tel: +48 (0)22 573 24 00
parker.poland@parker.com

PT – Portugal, Leca da Palmeira
Tel: +351 22 999 7360
parker.portugal@parker.com

RO – Romania, Bucharest
Tel: +40 21 252 1382
parker.romania@parker.com

RU – Russia, Moscow
Tel: +7 495 645-2156
parker.russia@parker.com

SE – Sweden, Spånga
Tel: +46 (0)8 59 79 50 00
parker.sweden@parker.com

SG – Singapore
Tel: +65 6887 6300

SK – Slovakia, Banská Bystrica
Tel: +421 484 162 252
parker.slovakia@parker.com

SL – Slovenia, Novo Mesto
Tel: +386 7 337 6650
parker.slovenia@parker.com

TH – Thailand, Bangkok
Tel: +662 717 8140

TR – Turkey, Istanbul
Tel: +90 216 4997081
parker.turkey@parker.com

TW – Taiwan, Taipei
Tel: +886 2 2298 8987

UA – Ukraine, Kiev
Tel +380 44 494 2731
parker.ukraine@parker.com

UK – United Kingdom,
Warwick
Tel: +44 (0)1926 317 878
parker.uk@parker.com

US – USA, Cleveland
Tel: +1 216 896 3000

VE – Venezuela, Caracas
Tel: +58 212 238 5422

ZA – South Africa,
Kempton Park
Tel: +27 (0)11 961 0700
parker.southafrica@parker.com

European Product Information Centre
Free phone: 00 800 27 27 5374
(from AT, BE, CH, CZ, DE, DK, ES, FI, FR, IE, IT, NL, NO, PL, PT, RU, SE, UK, ZA)

A division of Parker Hannifin Corporation

Copyright Parker Hannifin ltd 2010
Publication Reference: 178201770 01/10 Rev.006

Parker Hannifin ltd
Industrial division
Dukesway, Team Valley Trading Est
Gateshead, Tyne and Wear
England NE11 0PZ
Tel: +44 (0) 191 402 9000
Fax: +44 (0) 191 482 6296
www.domnickhunter.com

domnick hunter